电磁阀 /Solenoid Valve　气控阀 /Air control Valve

特　点 /Characteristic：

- 正常使用 1000 万次以上寿命。
- 阀体经特殊镜面加工及硬质处理。
- 采用进口油封摩擦阻力小，增长油封寿命。
- 使用进口线圈、低耗电量、反应快速。
- Service life:10million cycle times.
- The bodies are mirror finished and hardending treated.
- Equipped with imported oil seals with smaller friction and longer service life.
- With imported coils,low power consumption,speedy response.
- Capable of long service time without being damaged.

型号注释 /Note for type:

4V — 3 — 10 — 10 — AC220V — W

系　列 /Series:
4V:二(三)位五口电磁阀
4V: 2(3)position 5 ports solenoid valve
4A:二(三)位五口气控阀
4A: 2(3)position 5 ports air control valve
3V:二位三口电磁阀
3V: 2 position 3 ports solenoid valve
3A:二位三口气控阀
3A: 2 position 3 ports air control valve
4M:二位五口板接式
4M: 2 position 5 ports board conneted
4M:三位五口板接式
4M: 3 position 5 ports board conneted

系列代号：Series code:
300 系列
300 Series

线圈及位数：Coil and position:
10:单电控双位置
Single coil 2 position
20:双电控双位置
Double coil 2 position
30C: 三位置中封式
3 positions enclosed type
30E: 三位置中泄式
3 positions exhausted type
30P: 三位置中压式
3 positions press type

接管口径：Port size:
08:G1/4”
10:G3/8”

线圈电压：Coil voltage:
DC12V
DC24V
AC24V 50/60Hz
AC110V 50/60Hz
AC220V 50/60Hz
AC380V 50/60Hz

接线形式：Wiring type:
Blank(空白):
茶色带灯端子式/Browns
B:白色带灯端子式/White
H:黑色端子式/Black
W:引线式/Lead wire type

技术参数 /Specification:

型　号/Type	4V310-08	4V320-08	4V330C-08	4V330E-08	4V330P-08	4V310-10	4V220-10	4V330C-10	4V330E-10	4V330P-10
	4A310-08	4A320-08	4A330C-08	4A330E-08	4A330P-08	4A310-10	4A220-10	4A330C-10	4A330E-10	4A330P-10
位置数/position number	二位五口/2 Positon 5 Way		三位五口/3 Positon 5 Way			二位五口/2 Positon 5 Way		三位五口/3 Positon 5 Way		
有效截面积/Effective sectional area	25mm²(CV=1.40)		18mm²(CV=1.00)			30mm²(CV=1.68)		18mm²(CV=1.00)		
型号/Type	3V310-08	3V320-08	3A310-08	3A320-08		3V310-10	3V320-10	3A310-10	3A320-10	
位置数/position number	二位三口/2 Positon 3 Way					二位三口/2 Positon 3 Way				
有效截面积/Effective sectional area	25mm²(CV=1.40)					30mm²(CV=1.68)				
接管口径/Port size	进气/input= 出气/output= 排气/exhausted=G1/4”					进气/input=出气/output=G3/8”　排气/exhausted=G1/4”				
工作介质/Fluid	经 40 μ m 过滤的压缩空气/Compressed Air									
动作方式/Acting type	内部先导式/Internally pilot-actuated									
使用压力范围/Working pressure (MPa)	0.2~0.8									
使用温度范围/Ambient temperature(℃)	-5~50									
使用电压范围/Voltage range	± 10%									

外形尺寸 /Dimension(mm):

4V310–08

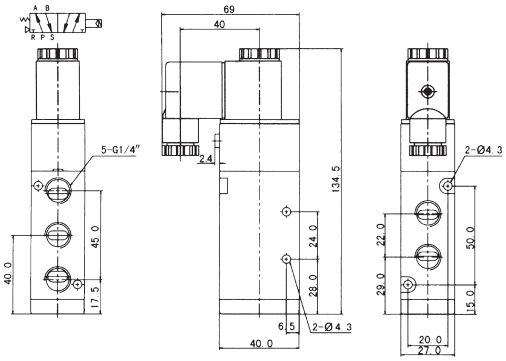

4V310–10

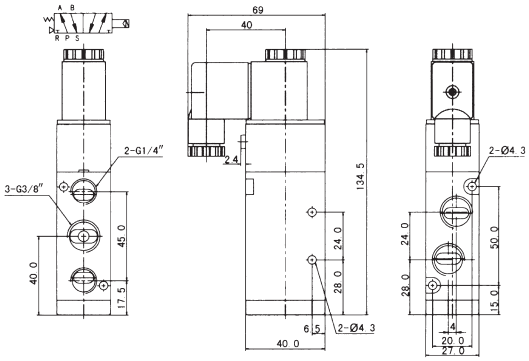

4V320–08

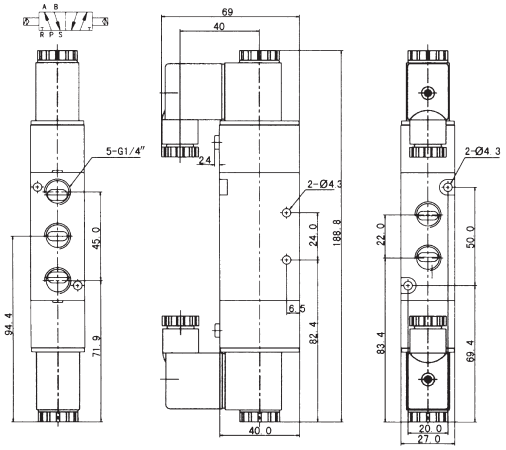

4V320–10

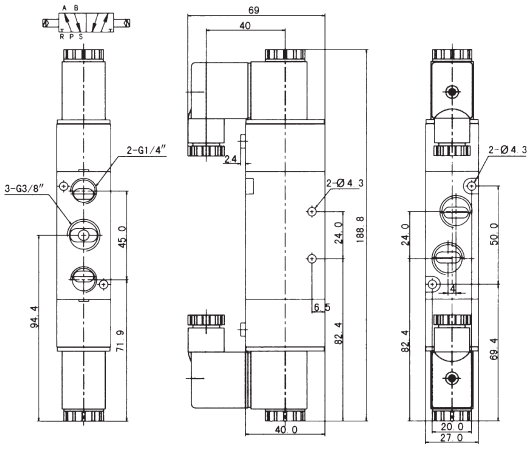

4V330–08

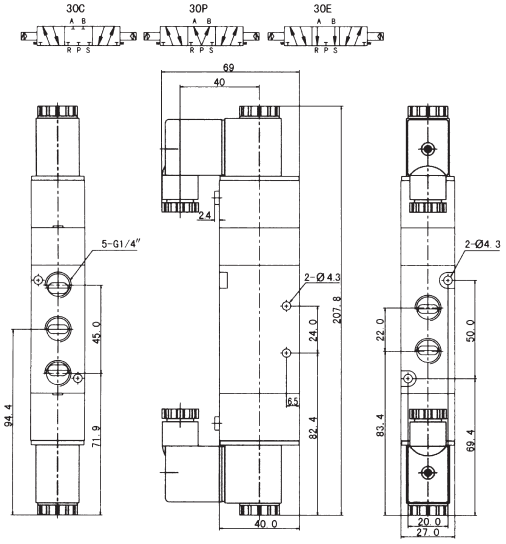

4V330–10

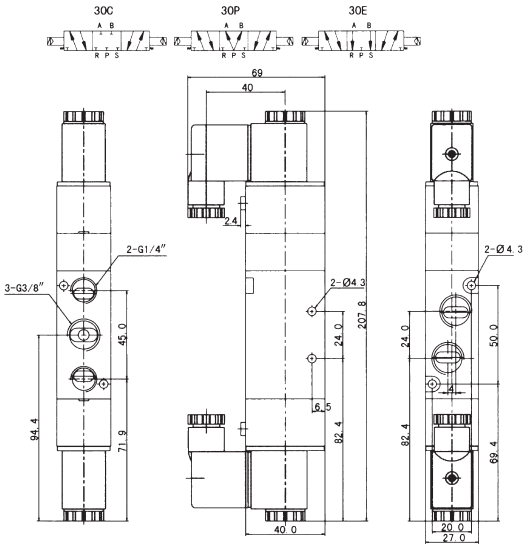

外形尺寸 /Dimension(mm):

4M310–08

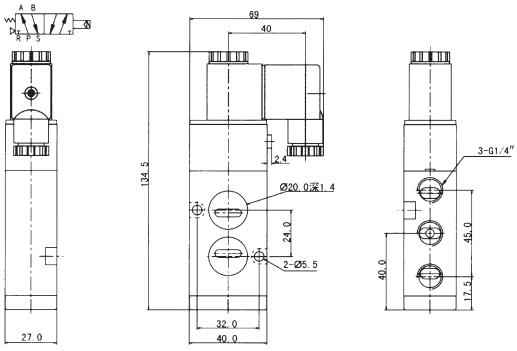

4M310–10

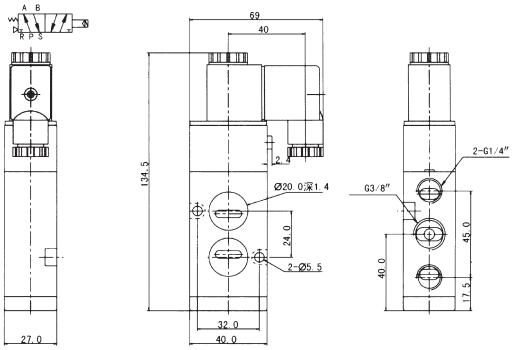

4M320–08

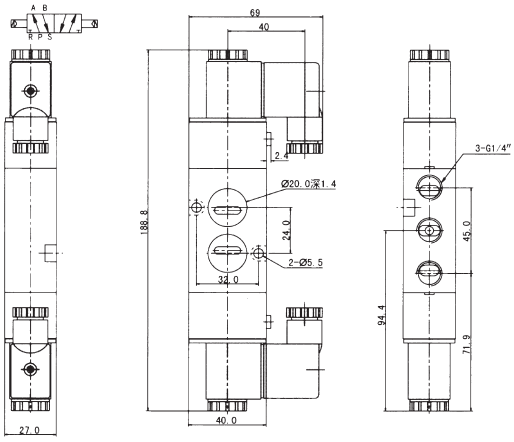

4M320–10

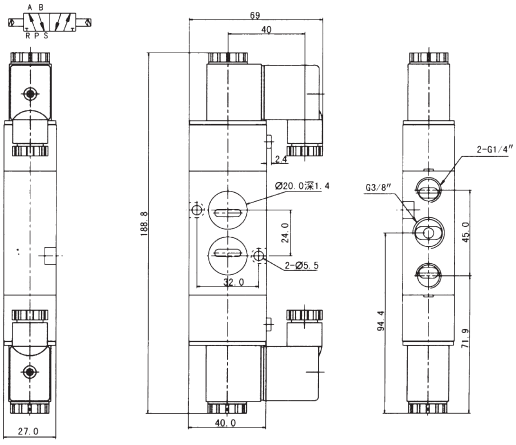

4M330–08

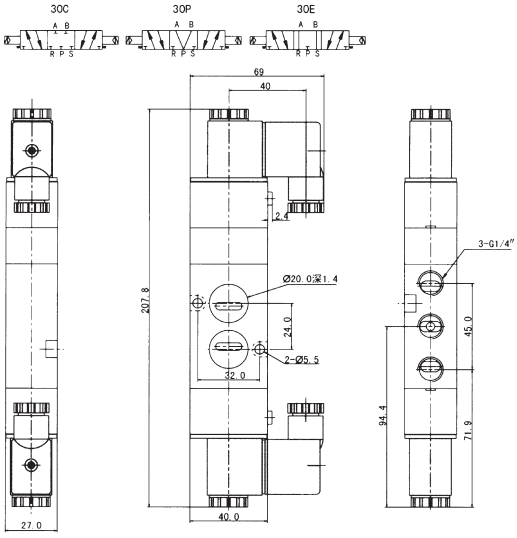

4M330–10

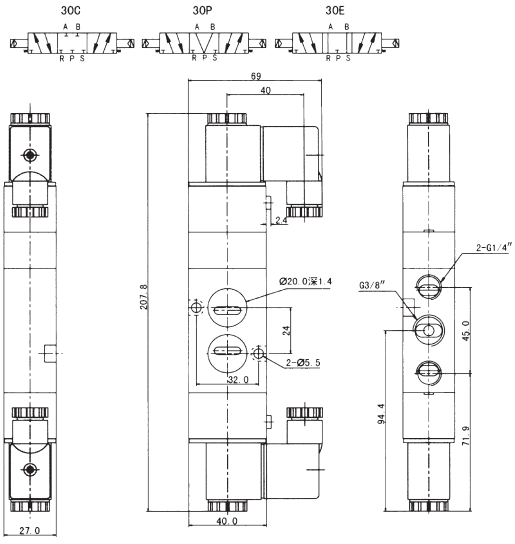

外形尺寸 /Dimension(mm):

4A310–08

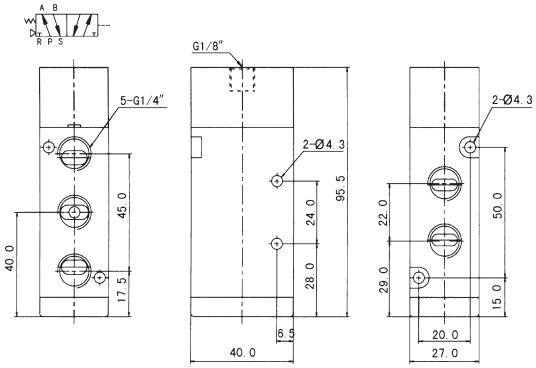

4A310–10

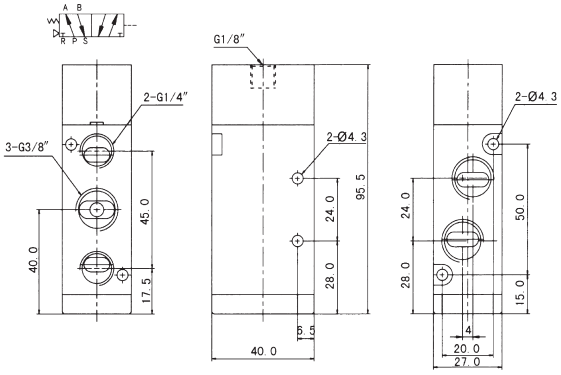

4A320–08

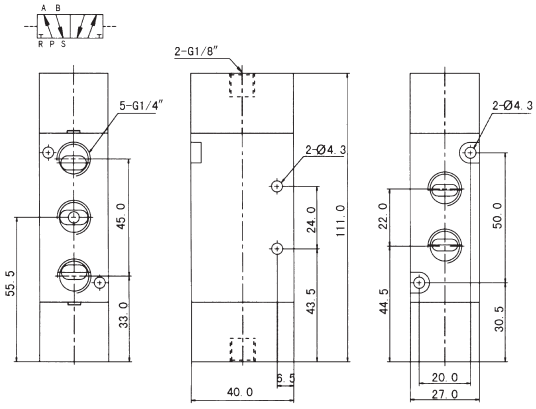

4A320–10

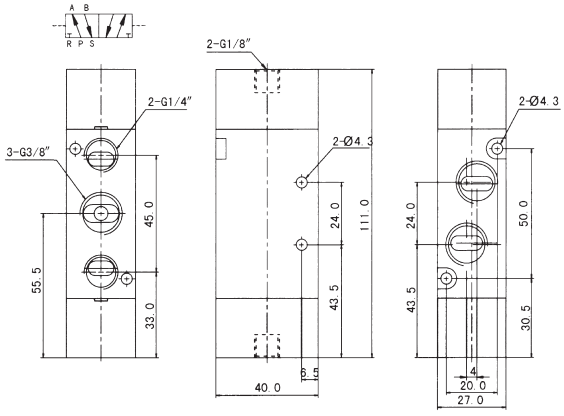

4A330–08

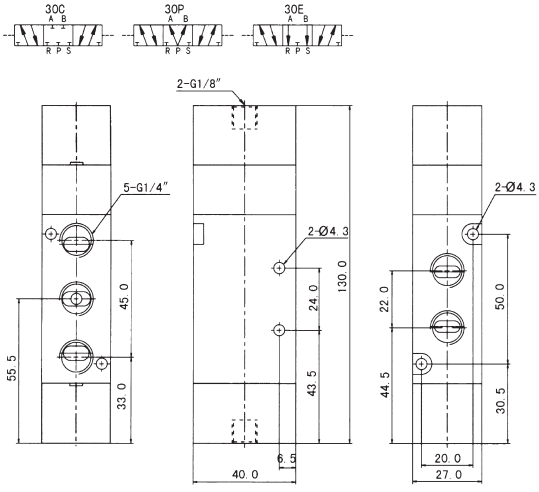

4A330–10

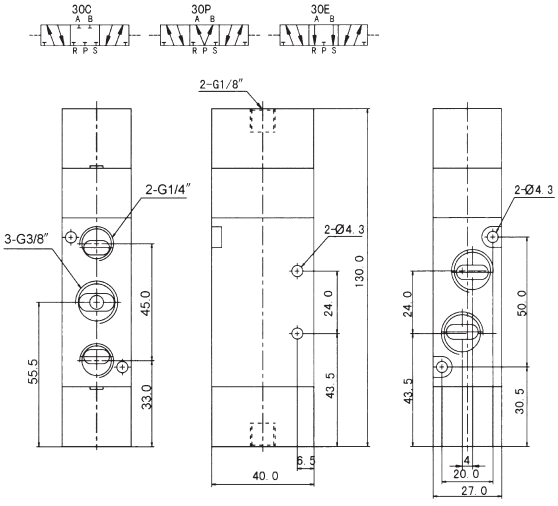

外形尺寸 /Dimension(mm):

3V310–08

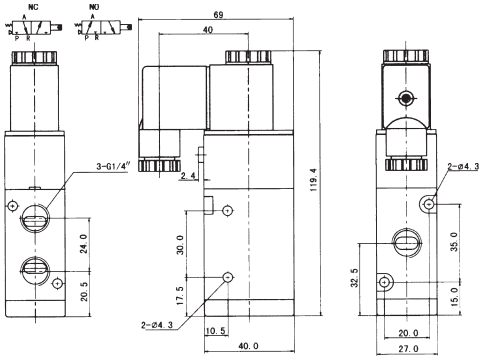

3V310–10

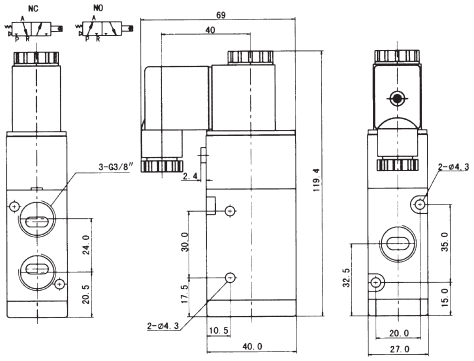

3V320–08

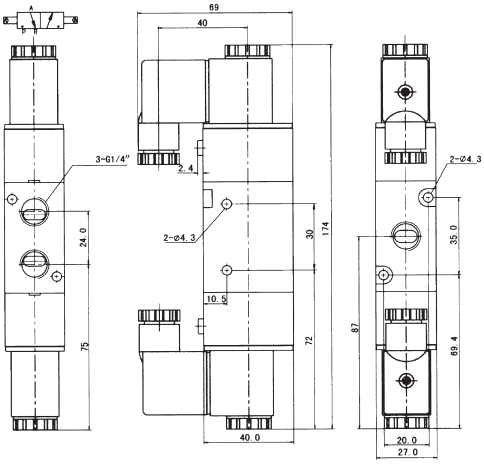

3V320–10

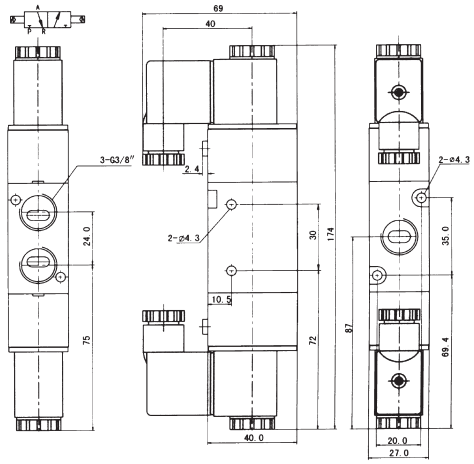

3A310–08

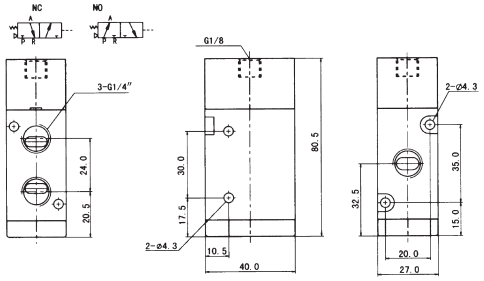

3A310–10

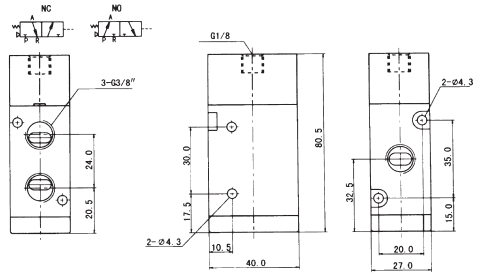

3A320–08

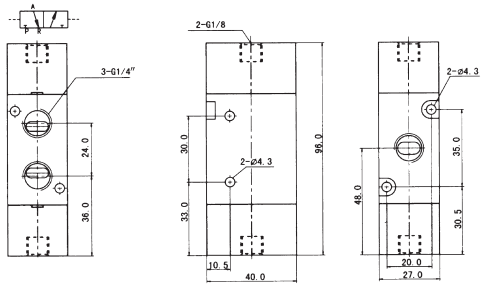
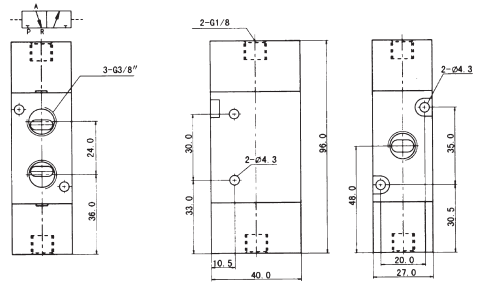
3A320–10