电磁阀 /Solenoid Valve　气控阀 /Air control Valve

特　点 /Characteristic：

- 正常使用 1000 万次以上寿命。
- 阀体经特殊镜面加工及硬质处理。
- 采用进口油封摩擦阻力小，增长油封寿命。
- 使用进口线圈、低耗电量、反应快速。
- Service life:10million cycle times.
- The bodies are mirror finished and hardending treated.
- Equipped with imported oil seals with smaller friction and longer service life.
- With imported coils,low power consumption,speedy response.
- Capable of long service time without being damaged.

型号注释 /Note for type:

4V — 2 — 10 — 08 — AC220V — W

系　列 /Series:
4V:二(三)位五口电磁阀
4V: 2(3)position 5 ports solenoid valve
4A:二(三)位五口气控阀
4A: 2(3)position 5 ports air control valve
3V:二位三口电磁阀
3V: 2 position 3 ports solenoid valve
3A:二位三口气控阀
3A: 2 position 3 ports air control valve
4M:二位五口板接式
4M: 2 position 5 ports board conneted
4M:三位五口板接式
4M: 3 position 5 ports board conneted

系列代号：Series code:
200 系列
200 Series

线圈及位数：Coil and position:
10:单电控双位置
Single coil 2 position
20:双电控双位置
Double coil 2 position
30C: 三位置中封式
3 positions enclosed type
30E: 三位置中泄式
3 positions exhausted type
30P: 三位置中压式
3 positions press type

接管口径：Port size:
06:G1/8”
08:G1/4”

线圈电压：Coil voltage:
DC12V
DC24V
AC24V　50/60Hz
AC110V 50/60Hz
AC220V 50/60Hz
AC380V 50/60Hz

接线形式：Wiring type:
Blank(空白):
茶色带灯端子式 /Browns
B:白色带灯端子式 /White
H:黑色端子式 /Black
W:引线式 /Lead wire type

技术参数 /Specification:

型　号/Type	4V210-06	4V220-06	4V230C-06	4V230E-06	4V230P-06	4V210-08	4V220-08	4V230C-08	4V230E-08	4V230P-08
	4A210-06	4A220-06	4A230C-06	4A230E-06	4A230P-06	4A210-08	4A220-08	4A230C-08	4A230E-08	4A230P-08
位置数/position number	二位五口/2 Positon 5 Way		三位五口/3 Positon 5 Way			二位五口/2 Positon 5 Way		三位五口/3 Positon 5 Way		
有效截面积/Effective sectional area	14mm²(CV=0.78)		12mm²(CV=0.67)			16mm²(CV=0.89)		12mm²(CV=0.67)		

型号 /Type	3V210-06	3V220-06	3A210-06	3A220-06	3V210-08	3V220-08	3A210-08	3A220-08
位置数/position number	二位三口/2 Positon 3 Way				二位三口/2 Positon 3 Way			
有效截面积/Effective sectional area	14mm²(CV=0.78)				16mm²(CV=0.89)			
接管口径 /Port size	进气/input= 出气/output= 排气/exhausted=G1/8”				进气/input=出气/output=G1/4”　排气/exhausted=G1/8”			
工作介质 /Fluid	经 40 μ m 过滤的压缩空气 /Compressed Air							
动作方式 /Acting type	内部先导式/Internally pilot-actuated							
使用压力范围/Working pressure (MPa)	0.2~0.8							
使用温度范围/Ambient temperature(℃)	-5~50							
使用电压范围 /Voltage range	± 10%							

外形尺寸 /Dimension(mm):

4V210–06

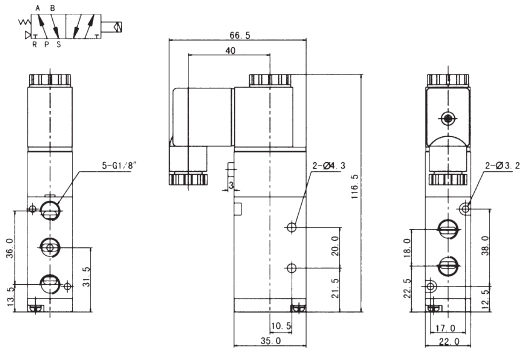

4V210–08

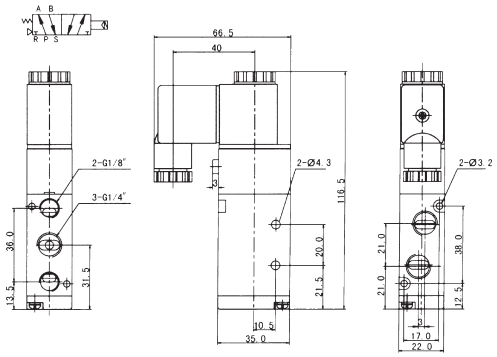

4V220–06

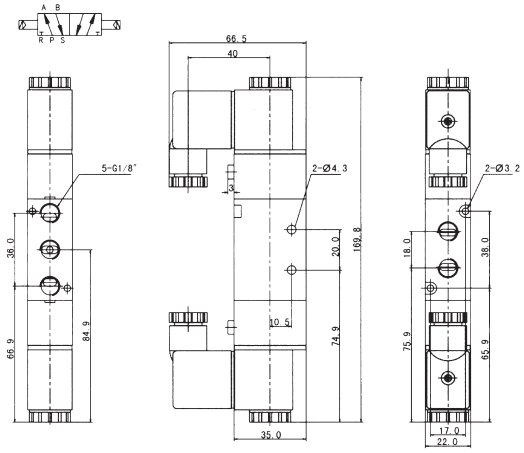

4V220–08

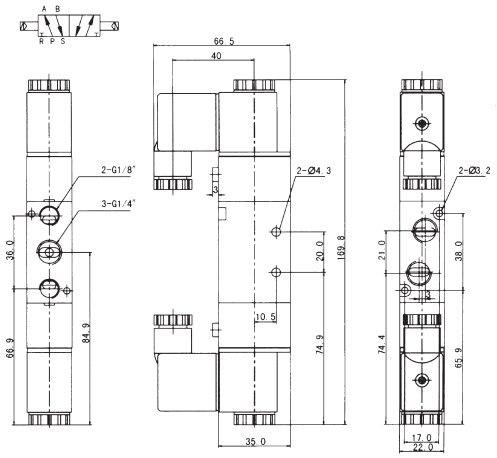

4V230–06

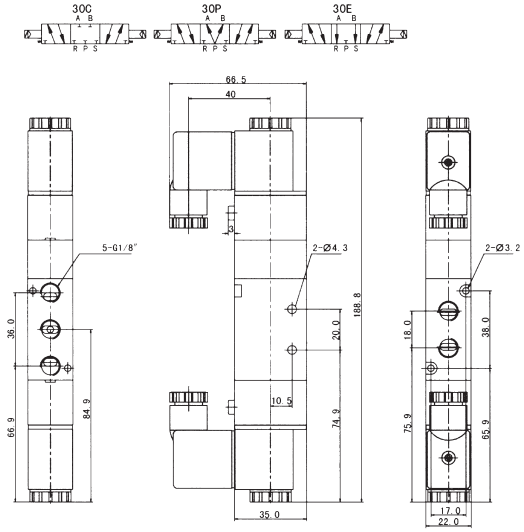

4V230–08

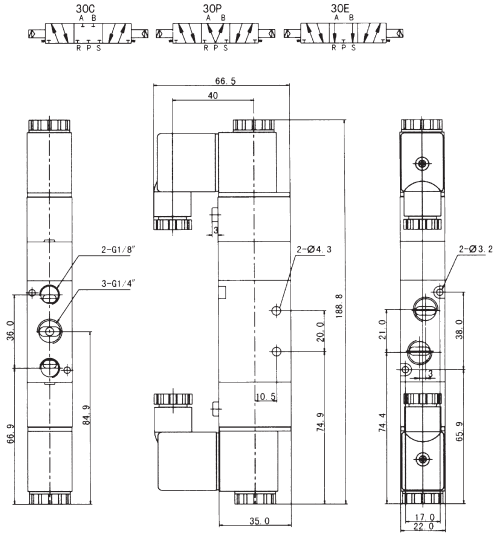

外形尺寸 /Dimension(mm):

4M210–06

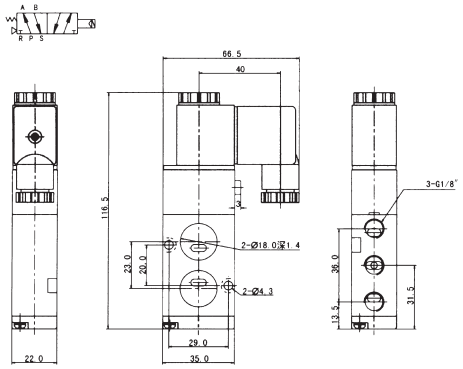

4M210–08

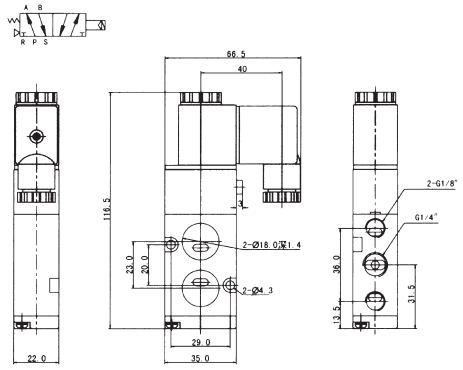

4M220–06

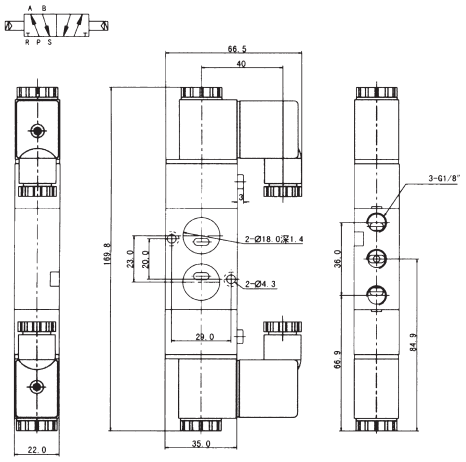

4M220–08

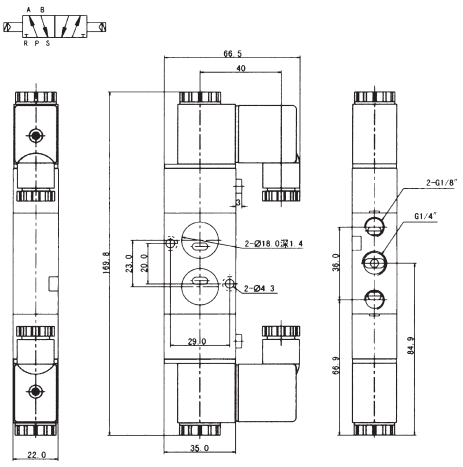

4M230–06

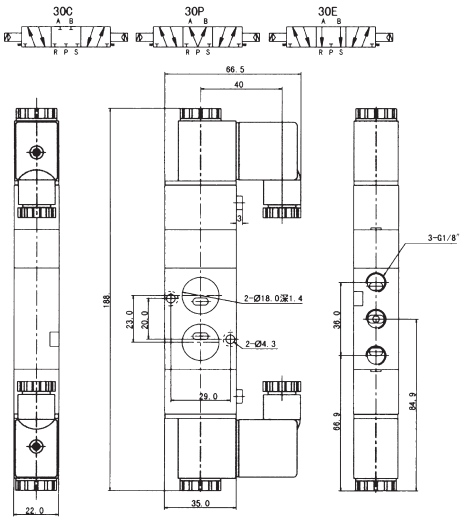

4M230–08

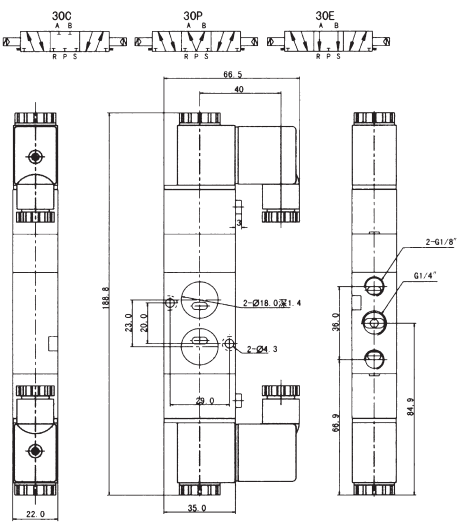

外形尺寸 /Dimension(mm):

4A210–06

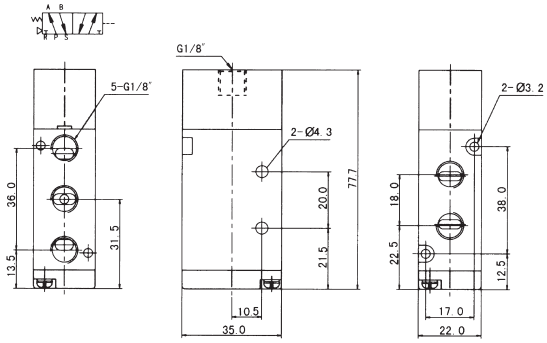

4A210–08

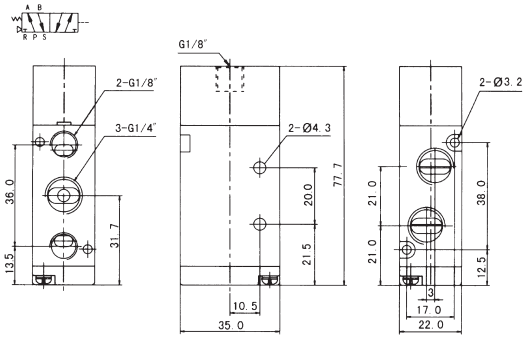

4A220–06

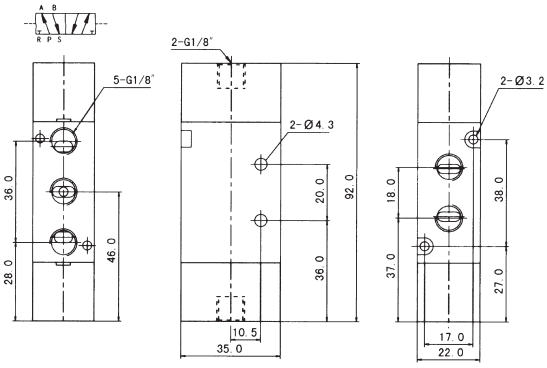

4A220–08

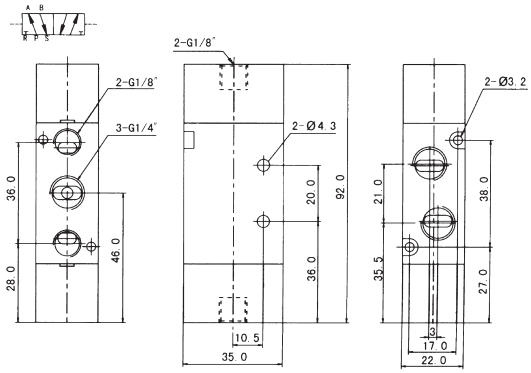

4A230–06

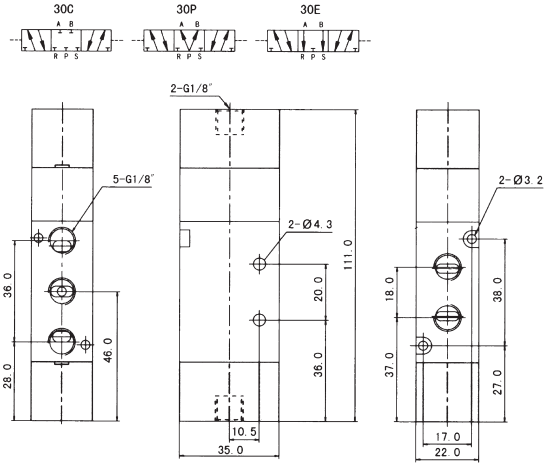

4A230–08

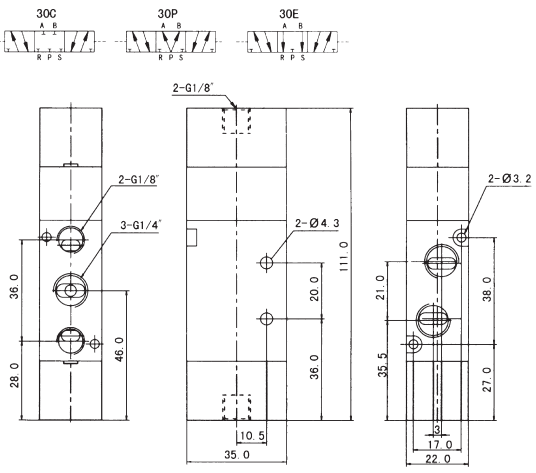

外形尺寸 /Dimension(mm):

3V210–06

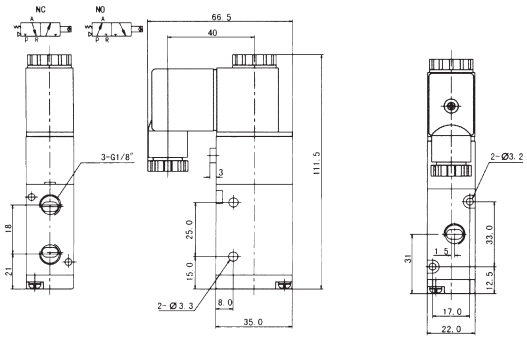

3V210–08

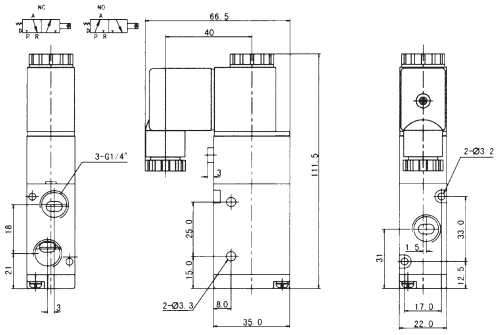

3V220–06

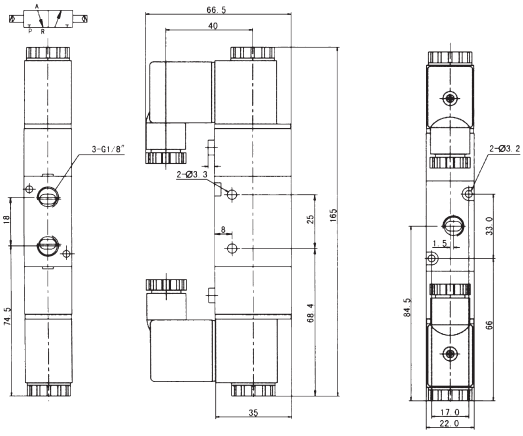

3V220–08

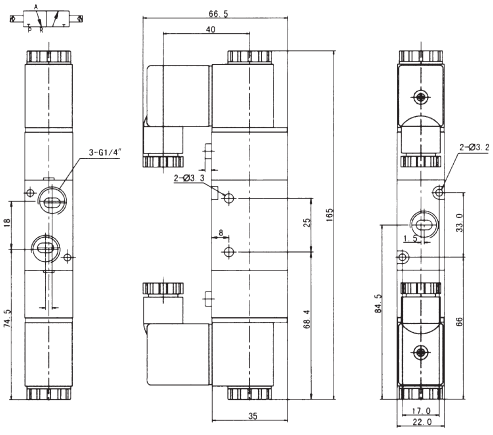

3A210–06

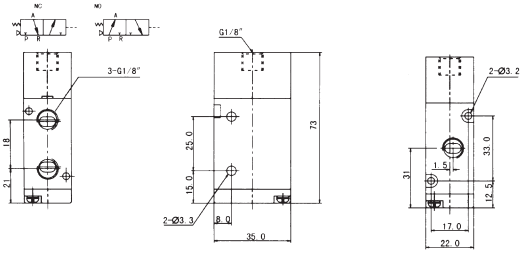

3A210–08

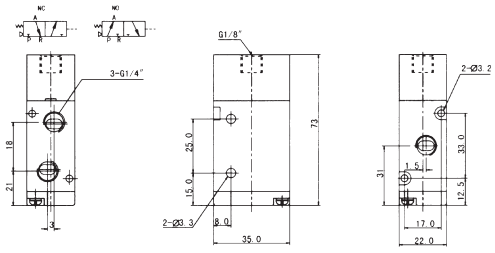

3A220–06

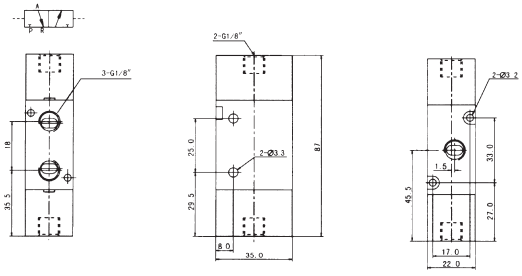
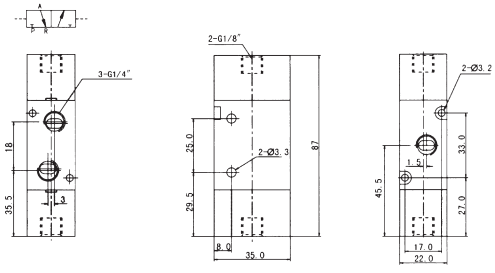
3A220–08